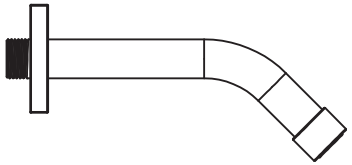

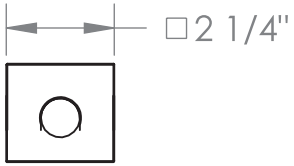

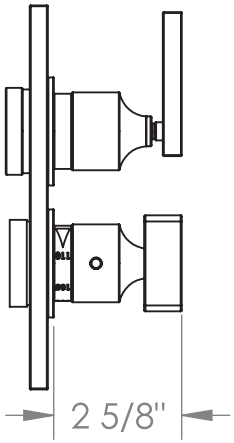

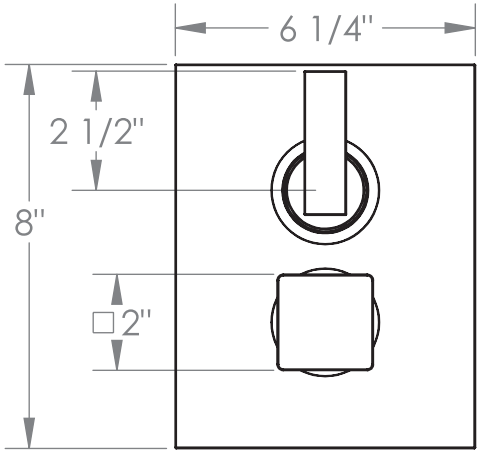

Exclusively for

REJUVENATION®

By WATERMARK

C5415 WINSLOW THERMOSTATIC

Shower System

Meets the applicable requirements of ASME A112.18.1-2005/CSA B125.1-05, entitled "Plumbing Supply Fittings"

2550 NW Nicolai Street Portland Oregon 97210 Customer Service: 888 401-1900 rejuvenation.com